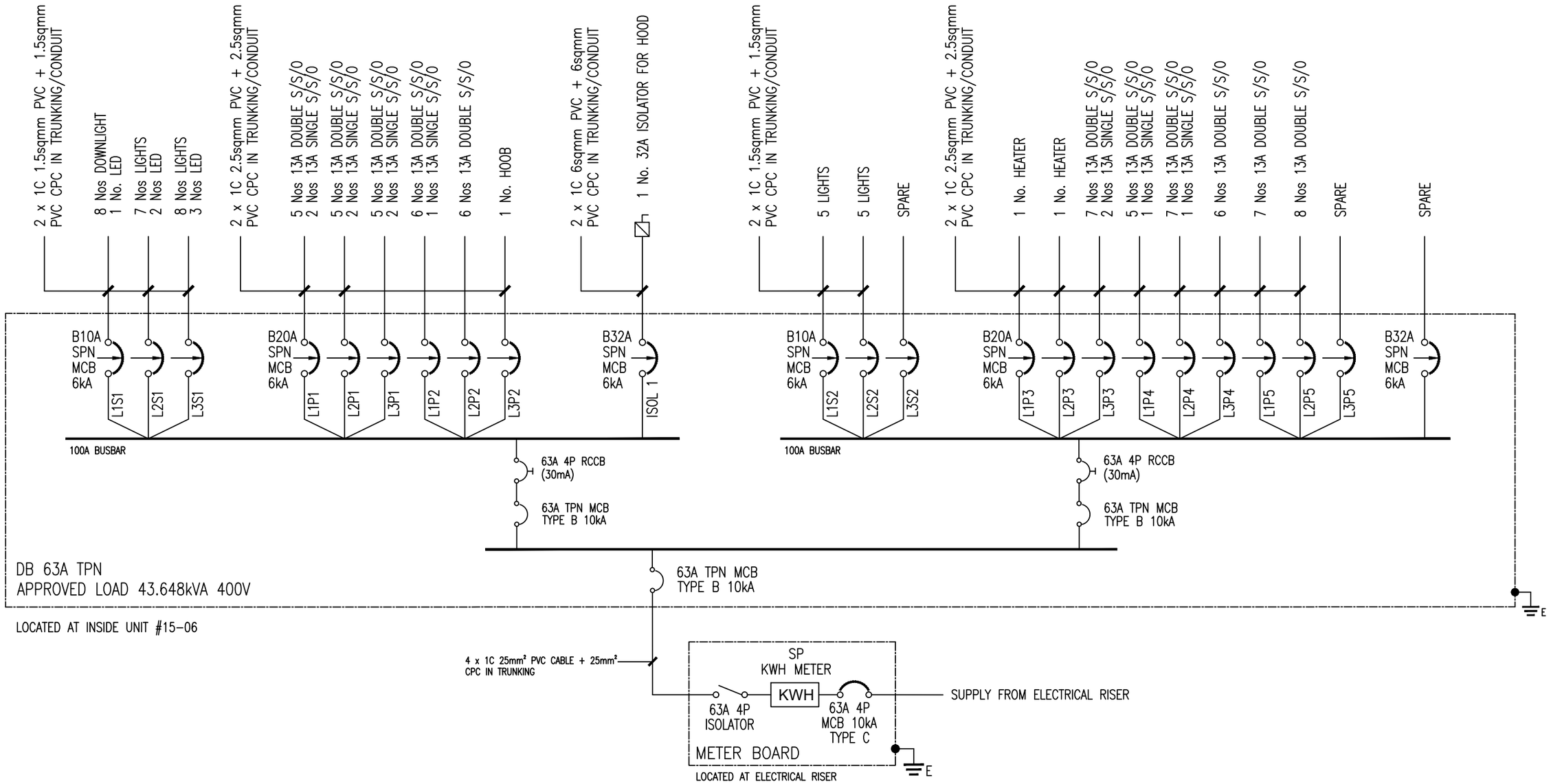

ADDRESS:			DRAWING TITLE :			DATE :
123 MAYER ROAD #15-06 S 437934			63A TPN DB SINGLE LINE DIAGRAM (SLD)			11 DEC 2025
						REV : 0